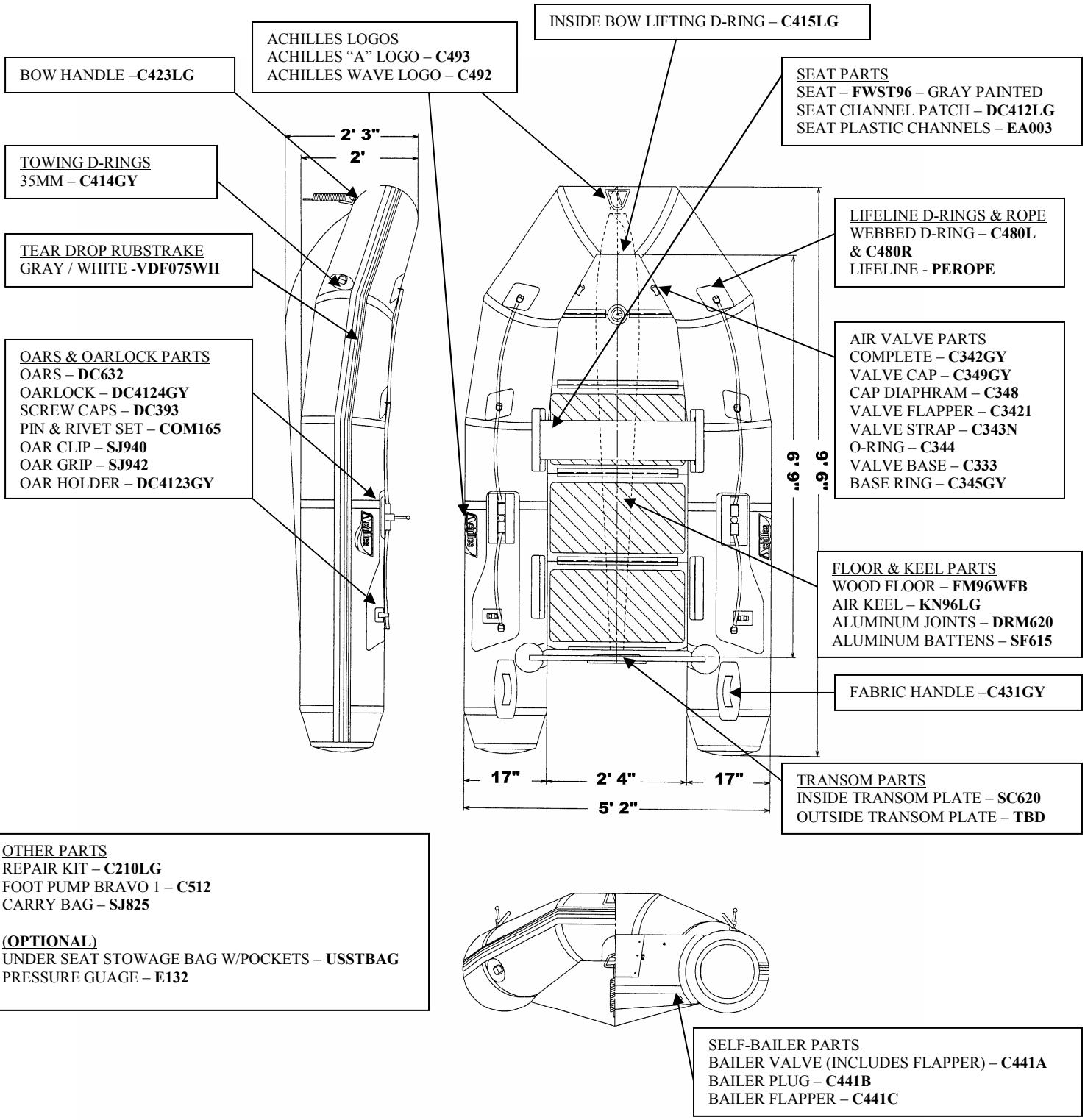

SPD-290 (2008)

LINE DRAWING & PARTS LIST